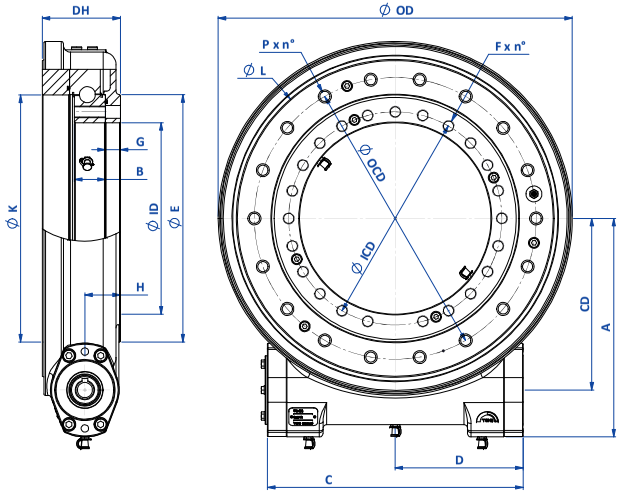

FLANGE TYPES

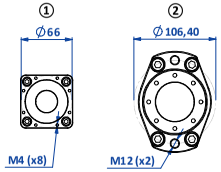

SHAFT TYPES

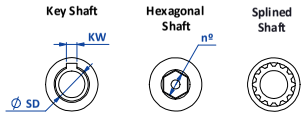

DIMENSIONS

	TE160-Z1		TE236-Z1		TE314-Z0		TE435-Z0		TE523-Z0		TE639-Z0		TE760-Z0	
	mm	in	mm	in	mm	in	mm	in	mm	in	mm	in	mm	in
Ø OD	188	7.40	268	10.55	370	14.57	490	19.29	580	22.83	672	26.46	795	31.30
Ø ID	30	1.18	98	3.86	145	5.71	265	10.43	324	12.76	432	17.01	512	20.16
Ø OCD	130	5.12	203,20	8.00	270	10.63	390	15.35	480	18.90	584	22.99	675	26.57
P x n°	M10 ↓20 mm x 8		M12 ↓25 mm x 8		M16 ↓30 mm x 16		M16 ↓32 mm x 18		M16 ↓32 mm x 20		M20 ↓40 mm x 36		M20 ↓35 mm x 36	
Ø ICD	155	6.10	120,60	4.75	175	6.89	295	11.61	365	14.37	465	18.31	565	22.24
F x n°	M10 ↓18 mm x 8		M12 x 10		M16 x (16-1)		M16 x (24-1)		M16 x 20		M20 x (36-1)		M20 x (36-1)	
DH	86,30	3.40	83,50	3.29	108	4.25	109	4.29	111,50	4.39	123	4.84	125	4.92
CD	93,70	3.69	132,70	5.22	174,16	6.86	237,59	9.35	275,47	10.84	339,10	13.35	401,89	15.82
A	127,70	5.03	166,70	6.56	238,66	9.40	302,09	11.89	339,97	13.39	403,60	15.89	466,39	18.36
B	-	-	36	1.42	44	1.73	43	1.69	48	1.89	57	2.24	60	2.36
C	184	7.24	204	8.03	339	13.35	354	13.94	390	15.35	429	16.89	474	18.66
D	92	3.62	102	4.02	169,50	6.67	177	6.97	195	7.68	214,50	8.45	237	9.33
Ø E	178	7.01	163	6.42	222,50	8.76	342,50	13.49	412	16.22	525	20.67	640	25.20
G	15,50	0.61	15	0.51	22	0.87	21	0.83	19,50	0.77	27	1.06	30	1.18
H	40,50	1.59	37,50	1.48	50	1.97	49,50	1.95	51,50	2.03	57,50	2.26	60	2.36
Ø K	110	4.33	163	6.42	222	8.74	342	13.46	422	16.61	525	20.67	630	24.80
Ø L	150	5.91	230	9.06	320	12.60	440	17.32	520	20.47	615	24.21	740	29.13

FLANGES and SHAFTS

	TE160-Z1		TE236-Z1		TE314-Z0		TE435-Z0		TE523-Z0		TE639-Z0		TE760-Z0	
	mm	in	mm	in	mm	in	mm	in	mm	in	mm	in	mm	in
KW	4	0.16	5	0.20	8	0.31	8	0.31	8	0.31	8	0.31	8	0.31
Ø SD	12	0.47	16	0.63	25	0.98	25	0.98	25	0.98	25	0.98	25	0.98
Input	Flange ① Key Shaft		Flange ① Key Shaft		Flange ② Key Shaft		Flange ② Key Shaft		Flange ② Key Shaft		Flange ② Key Shaft		Flange ② Key Shaft	
Output	See Drawing		Flange ① Hex. 10 mm Shaft		Flange ② Hex. 24 mm Shaft		Flange ② Hex. 24 mm Shaft		Flange ② Hex. 24 mm Shaft		Flange ② Hex. 24 mm Shaft		Flange ② Hex. 24 mm Shaft	

SIZES

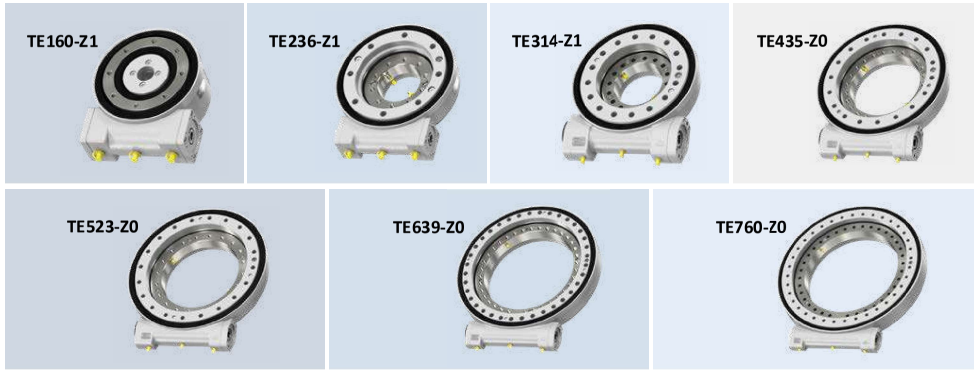

MOMENT LOADING CHARTS

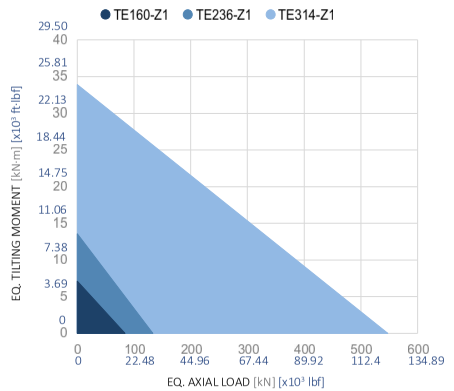

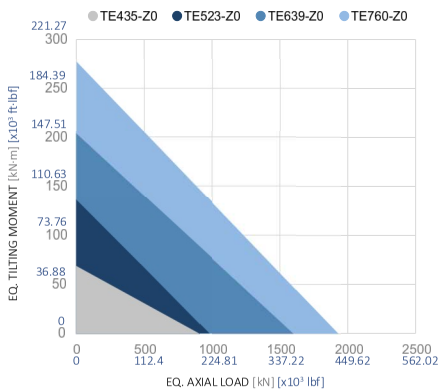

RATINGS

		TE160-Z1	TE236-Z1	TE314-Z0	TE435-Z0	TE523-Z0	TE639-Z0	TE760-Z0
Min. input torque	N·m	2 - 6	2 - 6	2 - 10	2 - 10	2 - 10	2 - 10	2 - 10
	ft·lbf	1.48 - 4.43	1.48 - 4.43	1.48 - 7.38	1.48 - 7.38	1.48 - 7.38	1.48- 7.38	1.48 - 7.38
Gear ratio		62:1	71:1	61:1	85:1	102:1	125:1	150:1
Efficieny		30 %	40 %	40 %	40 %	40 %	40 %	40 %
Max. torque	kN·m	1,20	1,46	8,84	12,31	18,03	30,50	45,32
	x10³ ft·lbf	0.89	1.08	6.52	9.08	13.3	22.5	33.43
Nominal torque	kN·m	0,60	1,04	7,32	10,20	15,10	23,50	35,26
	x10³ ft·lbf	0.44	0.77	5.40	7.52	11.14	17.33	26.01
Holding torque	kN·m	5,00	9,40	35,00	43,20	65,10	95,20	142,50
	x10³ ft·lbf	3.69	6.93	25.81	31.86	48.02	70.22	105.10
Tilting moment	kN·m	7,10	13,60	33,90	67,80	135,60	203,40	277,00
	x10³ ft·lbf	5.24	10.03	25.00	50.01	100.01	150.02	204.30
Radial static load	kN	64,00	53,00	204,00	338,00	391,00	640,00	770,00
	x10³ lbf	14.39	11.91	45.86	75.99	87.90	143.88	173.10
Axial static load	kN	84,00	133,00	547,00	905,00	977,00	1598,00	1926,00
	x10³ lbf	18.88	29.90	122.97	203.45	219.64	359.24	432.98
Max. output speed	rpm	1	1	1	1	1	1	1
Weight	Kg	14,64	20,97	48,75	70,20	94,64	119,45	192,76
	lbs	32.28	46.23	107.48	154.76	208.65	263.34	424.96
Paint		RAL7040	RAL7040	RAL7040	RAL7040	RAL7040	RAL7040	RAL7040