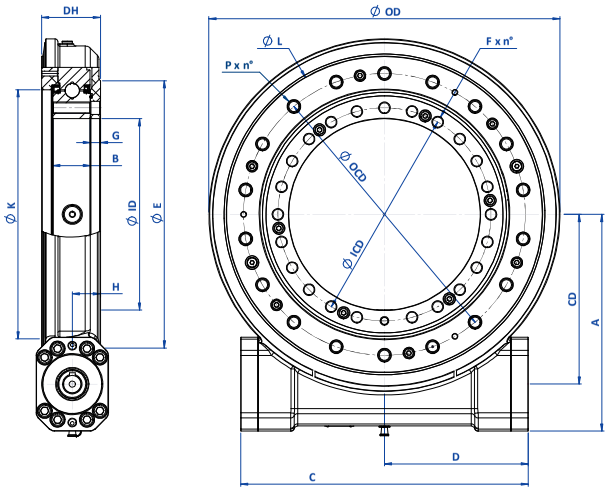


## FLANGE TYPES

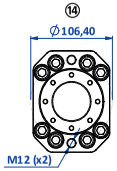


## SHAFT TYPES

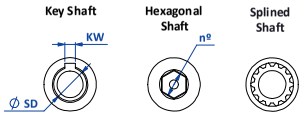


## DIMENSIONS

| | PRO0236A-Z01-RAA | | PRO0314A-Z01-RAA | | PRO0435A-Z01-RAA | | PRO0500A-Z02-RAB | |
|---|---|---|---|---|---|---|---|---|
| | mm | in | mm | in | mm | in | mm | in |
| Ø OD | 286 | 11.26 | 364 | 14.33 | 486 | 19.13 | 520 | 20.47 |
| Ø ID | 98 | 3.86 | 145 | 5.71 | 265 | 10.43 | 300 | 11.81 |
| Ø OCD | 190 | 7.48 | 270 | 10.63 | 390 | 15.35 | 420 | 16.54 |
| P x n° | M12 ↓22 mm x 8 | | M16 ↓28 mm x 16 | | M16 ↓28 mm x 18 | | M16 ↓28 mm x 24 | |
| Ø ICD | 120,50 | 4.74 | 175 | 6.89 | 295 | 11.61 | 330 | 12.99 |
| F x n° | M12 x 10 | | M16 x (16-1) | | M16 x (24-1) | | Ø17,50 mm x (24) | |
| DH | 82 | 3.23 | 81,50 | 3.21 | 81,50 | 3.21 | 97,50 | 3.84 |
| CD | 135 | 5.31 | 175 | 6.89 | 235 | 9.25 | 253 | 9.96 |
| A | 200 | 7.87 | 240 | 9.45 | 300 | 11.81 | 318 | 12.52 |
| B | 51 | 2.01 | 52 | 2.05 | 52 | 2.05 | 52 | 2.05 |
| C | 333 | 13.11 | 353 | 13.90 | 399 | 15.71 | 434 | 17.09 |
| D | 166,50 | 6.56 | 176,50 | 6.95 | 199 | 7.83 | 217 | 8.54 |
| Ø E | 187 | 7.36 | 250 | 9.84 | 370 | 14.57 | 400 | 15.75 |
| G | 14 | 0.55 | 14 | 0.55 | 14 | 0.55 | 30 | 1.18 |
| H | 39 | 1.54 | 39 | 1.54 | 39 | 1.54 | 55 | 2.17 |
| Ø K | 150 | 5.91 | 220 | 8.66 | 345 | 13.58 | 378 | 14.88 |
| Ø L | 238 | 9.37 | 320 | 12.60 | 438 | 17.24 | 472 | 18.58 |

## FLANGES and SHAFTS

| | PRO0236A-Z01-RAA | | PRO0314A-Z01-RAA | | PRO0435A-Z01-RAA | | PRO0500A-Z02-RAB | |
|---|---|---|---|---|---|---|---|---|
| | mm | in | mm | in | mm | in | mm | in |
| KW | 8 | 0.31 | 8 | 0.31 | 8 | 0.31 | 8 | 0.31 |
| Ø SD | 25 | 0.98 | 25 | 0.98 | 25 | 0.98 | 25 | 0.98 |
| Input | Flange ⑭ Key Shaft | | Flange ⑭ Key Shaft | | Flange ⑭ Key Shaft | | Flange ⑭ Key Shaft | |
| Output | Flange ⑭ Key Shaft | | Flange ⑭ Key Shaft | | Flange ⑭ Key Shaft | | Flange ⑭ Key Shaft | |



## SIZES

## MOMENT LOADING CHARTS

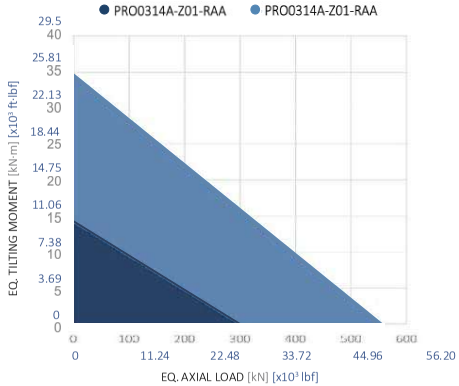


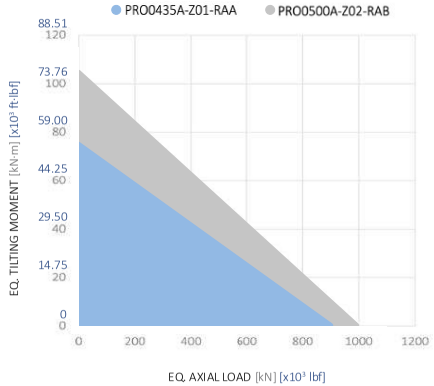


## RATINGS

| | | PRO0236A-Z01-RAA | PRO0314A-Z01-RAA | PRO0435A-Z01-RAA | PRO0500A-Z02-RAB |
|---|---|---|---|---|---|
| Min. input torque | N·m | 2 - 6 | 2 - 10 | 2 - 10 | 2 - 10 |
| | ft·lbf | 1.48 - 4.43 | 1.48 - 7.38 | 1.48- 7.38 | 1.48 - 7.38 |
| Gear ratio | | 44:1 | 61:1 | 85:1 | 92:1 |
| Efficieny | | 48 % | 52 % | 44 % | 42 % |
| Max. torque | kN·m | 6,50 | 9,30 | 12,90 | 16,20 |
| | x10³ ft·lbf | 4.79 | 6.86 | 9.51 | 11.94 |
| Nominal torque | kN·m | 5,50 | 7,90 | 10,90 | 13,70 |
| | x10³ ft·lbf | 4.06 | 5.83 | 8.05 | 10.10 |
| Holding torque | kN·m | 25,00 | 30,00 | 38,00 | 46,00 |
| | x10³ ft·lbf | 18.44 | 22.13 | 28.04 | 33.92 |
| Tilting moment | kN·m | 14,00 | 27,50 | 75,00 | 103,00 |
| | x10³ ft·lbf | 10.32 | 20.28 | 55.32 | 75.92 |
| Radial static load | kN | 94,00 | 204,00 | 338,00 | 380,00 |
| | x10³ lbf | 21.11 | 45.88 | 75.99 | 85.26 |
| Axial static load | kN | 290,00 | 547,00 | 905,00 | 1000,00 |
| | x10³ lbf | 65.12 | 123.58 | 203.35 | 224.81 |
| Max. output speed | rpm | 1 | 1 | 1 | 1 |
| Weight | Kg | 24,11 | 33,59 | 46,35 | 52,59 |
| | lbs | 53.14 | 74.06 | 102.18 | 115.96 |
| Paint | | RAL9005 | RAL9005 | RAL9005 | RAL905 |