TE-2 SERIES

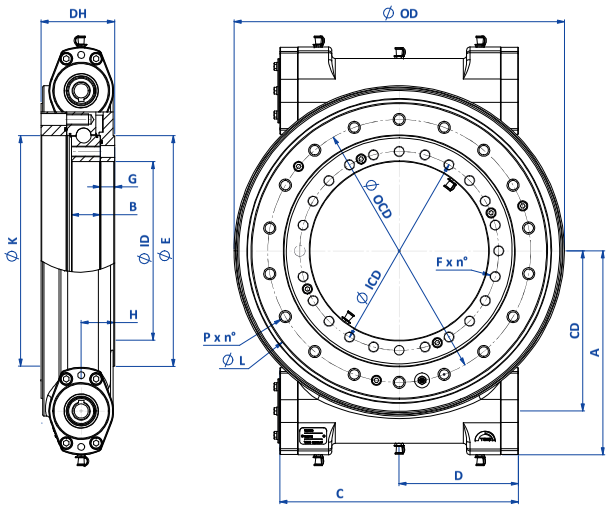

FLANGE TYPES

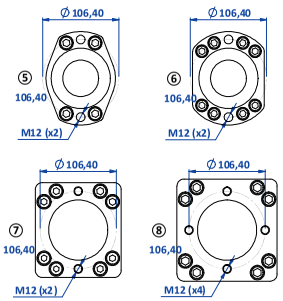

SHAFT TYPES

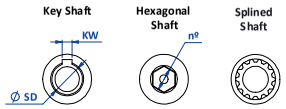

DIMENSIONS

	TE436-2-Z0		TE524-2-Z0		TE638-2-Z0		TE770-2-Z0	
	mm	in	mm	in	mm	in	mm	in
Ø OD	480	18.90	570	22.44	639	25.16	832	32.76
Ø ID	265	10.43	332	13.07	425	16.73	512	20.16
Ø OCD	390	15.35	479,40	18.87	584,20	22.99	675	26.57
P x n°	M16 ↓30 mm x 18		M16 ↓32 mm x 20		M20 ↓40 x 36		M20 ↓40 mm x 36	
Ø ICD	295	11.61	365,10	14.37	466,70	18.37	560	22.05
F x n°	M16 ↓30 mm x (24-1)		M16 ↓32 mm x 20		M20 ↓40 x (36-1)		M20 ↓40 mm x 29	
DH	108	4.25	108	4.25	130	5.12	148	5.83
CD	240	9.45	285	11.22	350	13.78	416	16.38
A	304	11.97	349	13.74	415	16.34	466	18.35
B	44	1.73	47	1.85	36	1.42	65	2.56
C	380	14.96	407	16.02	482,50	18.99	538	21.18
D	190	7.48	203,50	8.01	245	9.65	272,50	10.73
Ø E	340	13.39	406	15.98	550	21.65	628	24.72
G	26	1.02	30	1.18	30	1.18	47	1.85
H	51	2.01	55	2.17	65	2.56	83,50	3.29
Ø K	342	13.46	430	16.93	540	21.26	630	24.80
Ø L	426	16.77	509	20.04	629	24.76	748	29.45

FLANGES and SHAFTS

	TE436-2-Z0		TE524-2-Z0		TE638-2-Z0		TE760-2-Z0	
	mm	in	mm	in	mm	in	mm	in
KW	8	0.31	8	0.31	8	0.31	8	0.31
Ø SD	25	0.98	25	0.98	25	0.98	25	0.98
Input	Flange ⑤ Key Shaft		Flange ⑥ Key Shaft		Flange ⑦ Key Shaft		Flange ⑧ Key Shaft	
Output	Flange ⑤ Hex. 21 mm Shaft		Flange ⑥ Hex. 21 mm Shaft		Flange ⑦ Hex. 24 mm Shaft		Flange ⑧ Hex. 24 mm Shaft	

SIZES

MOMENT LOADING CHARTS

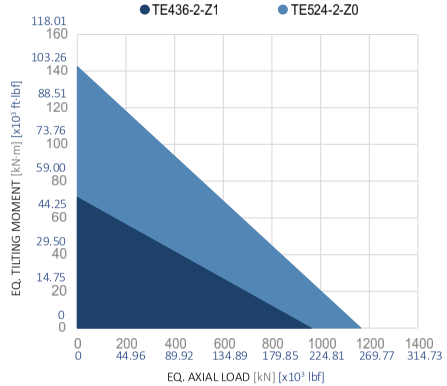

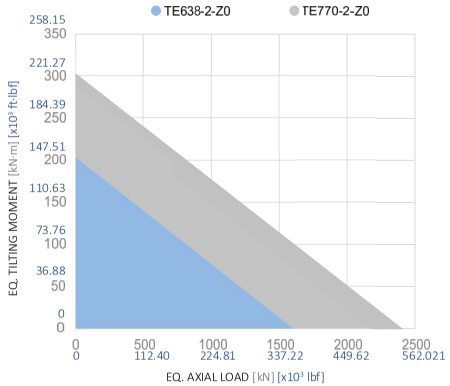

RATINGS

		TE436-2-Z0	TE524-2-Z0	TE638-2-Z0	TE770-2-Z0
Min. input torque	N·m	2 - 10	2 - 10	2 - 10	2 - 10
	ft·lbf	1.48 - 7.38	1.48 - 7.38	1.48- 7.38	1.48 - 7.38
Gear ratio		86:1	104:1	90:1	108:1
Efficieny		40 %	35 %	35 %	40 %
Max. torque	kN·m	-	19,44	48,00	58,00
	x10³ ft·lbf		14.34	35.40	42.78
Nominal torque	kN·m	16,20	16,34	-	-
	x10³ ft·lbf	11.95	12.05		
Holding torque	kN·m	74,00	110,00	181,00	275,00
	x10³ ft·lbf	54.58	81.13	133.55	202.83
Tilting moment	kN·m	71,20	142,40	203,00	310,00
	x10³ ft·lbf	52.51	105.03	149.79	228.64
Radial static load	kN	360,00	435,00	650,00	950,00
	x10³ lbf	80.93	97.79	146.13	213.57
Axial static load	kN	960,00	1166,00	1600,00	2400,00
	x10³ lbf	215.82	262.13	359.70	539.54
Max. output speed	rpm	1	1	1	< 1,50
Weight	Kg	-	-	-	-
	lbs				
Paint		RAL7040	RAL7040	RAL7040	RAL7040